RADIO, TELEVISION and F. M. PROGRAMS

KLAC	KFI	KMPC	KECA	KHJ	KFWB	KNX	KFOX	KFAC	KGER
570	640	710	790	930	980	1070	1280	1330	1390

The following programs are compiled from reports provided by the broadcasters. No responsibility assumed for last-minute changes which sometimes are made.

DIAL LITES — TONIGHT

7:00—KNX—When "My Friend Irma" breaks a date with Al to nurse a frozen bird he considers it a foul (or fowl, as you prefer) trick . . . he overhears her cooing to her fine feathered friend and completely misunderstands her sentiments.

8:00—KECA—"Let's Go With Ralph Flanagan" to Fort Ord when he and his band conduct tonight's recruiting show. A medley of Rogers and Hart tunes provide a fine musical evening.

8:30—KFI—Irra Petina is the guest of Gordon MacRae on the "Railroad Hour" when she recreates her original role in the "Song of Norway."

9:00—KFI—Thousands of school children are eagerly awaiting tonight's "Telephone Hour." They are music appreciation students who will hear Paganini's "Perpetual Motion," which they have been studying those last few months.

TELE-TIPS

7:00—KNBH—A film of last Sunday's Races at Agua Caliente will be telecast at this time each week. Joe Hernandez will call the races.

8:30—KTTV—After two weeks of active duty in the air arm of the U. S. Navy, Arthur Godfrey will return to the telescreen tonight.

9:30—KFI—Three old masterpieces and 125 Dutch modern paintings will be shown to the television audience and sold to the highest bidder at "Auction Center."

10:30—KTLA—Freeman Lusk moderates a discussion on the topic "Does the United Nations Meet the Challenge of the World Crisis?" when "Teleforum" meets tonight.

TELEVISION

KTSL . . Channel 2
KNBH . . Channel 4
KTLA . . Channel 5
KECA . . Channel 7
KFI . . . Channel 9
KTTV . . Channel 11
KLAC . . Channel 13

MONDAY, FEBRUARY 19, 1951

TONIGHT

4:15
KNBH (4)-Kate Smith
KECA (7)-Foreman Phillips
KLAC (13)—Al Jarvis

4:30
KFI (9) Stu Wilson
KTTV (11) Matinee, Jack Rourke

5:00
KNBH (4)-Tele Comics
KTTV (1)—Range Riders
KLAC (13)—Al Jarvis

5:15
KNBH (4)—Gabby Hayes Show
KFI (9)—Meglin Revue

5:30
KNBH (4)-Howdy Doody
KTLA (5)—News, Music
KFI (9)—News

5:45
KTSL (2)-Preview, Carnival for Kids
KTLA (5)—Police Calls
KECA (7)-Sandy Strong

6 P. M.
KTSL (2)-Western Cavalcade
KNBH (4)—Crusader Rabbit Komedy Klub (6:05)
KTLA (5)—Doye O'Dell Cowboy Thrills
KECA (7)-Space Patrol
KFI (9)—TV University (6:05)
KLAC (13)—Film

6:15
KECA (7)—Tom Corbett, Space Cadet

6:30
KNBH (4)-West Serial "Boots and Saddle"
KTLA (5)—Beany
KECA (7)—Foreman Phillips
KFI (9)-Armed Forces Report
KTTV (11)—Film Oddities
KLAC (13)—Film

6:45
KNBH (4)—Elmer Peterson
KECA (7)-Faye Emerson
KTLA (5)—Handy Hints
KLAC (13)-Take 15
KTTV (11)-Tom Harmon Show

7 P. M.
KTSL (2)—Lee's Lair
KNBH (4) Joe Hernandez at Caliente
KTLA (5)—News
KECA (7)—Triple Theater: "Kids Last Ride"
KFI (9)—Spot Lighter
KTTV (11)-Open House; Kay Mulvey
KLAC (13)—Ruth Waterbury

7:15
KTLA (5)—Your Town

7:30
KTSL (2)-Cavalcade of Stars.
KNBH (4)—News, Weather.
KTLA (5)—Dixie Show Boat
KFI (9)-"Special Delivery"
KTTV (11)—Newsreel
KLAC (13)-Film:

7:45
KNBH (4)—Roberta Quinlan.
KTTV (11)-Perry Como
KLAC (13)—Ship's Reporter

8 P. M.
KECA (7)—J. Arthur Rank Film: "Cottage to Let"
KNBH (4)—Film: "Hand on My Shoulder"
KTLA (5)—Film: "Strangler of the Swamp"
KFI (9)-Film: "Dude Bandit"
KTTV (11)-What's My Line?
KLAC (13) Sports

8:15
KLAC (13) Bobby Troup

8:30
KNBH (4)—"Bet Your Life," Groucho Marx
KTSL (2)—Film: "Flamingo Affair"
KTTV(11)—Arthur Godfrey
KLAC (13)-Boxing: Ocean Park

9 P. M.
KNBH (4)-Lights Out
KFI (9)-Canasta
KTTV (11)-Horace Heidt

9:15
KTLA (5)-Film: "No Trace"
KFI (9)—Film

9:30
KNBH (4)—"Leave It to Girls"
KFI (9) Auction Center
KTTV (11)-The Goldbergs

9:45
KTSL (2)-Manhattan Spotlight

10 P. M.
KECA (7)-Film: "Gas House Kids"
KNBH (4)-Voice of Firestone
KTSL (2)—F. Lawton Backstage with NTG.
KTTV (11)-Studio 1: "The Target"

10:30
KNBH (4)—Top View in Sports
KTLA (5)—Teleforum
KFI (9)-Eddie Coontz

10:45
KNBH (4)—Film

11 P. M.
KTSL (2)-Peter Potter
KNBH (4)—Broadway Open House
KECA (7)—"Champagne Party," News
KTTV (11)—News Reel —Geo. Martin Jr.
KLAC (13)-Clete Roberts

11:10
KLAC (13)—Film: "Stolen Paradise"

11:15
KTTV (11) Glancing at Anson

11:30
11:30—KTLA (5)—Final Edition

12:05
KTSL (2)-High Lights

TOMORROW (Tuesday) FEBRUARY 20

11:45
KTTV (11)-Serenade

12 NOON
KLAC (13)—Mike Roy
KECA (7)—Test
KTTV (11)—Frank Hemingway

12:15
KTTV (11)-Film Oddities
KLAC (13)
9:00-Bkfst. Frolics
10:00-Joe Graydon
12:00-Mike Roy
1:00—Al Jarvis
3:00—Film: "Murder in Museum"
4:15-Al Jarvis
KTTV (11)
12:30—Instruction for Survival
1:00—Bonus Bids (to 2:00)
2:00—Film Oddities
2:15—Garry Moore
2:45-First 100 Years
3:00—Come to Kitchen.
3:30-Movie
4:30-Ladies' Matinee
KFI (9)
9:00-Bill Welsh Show
10:00—Film: "I Can't Escape"
11:15-Bill Welsh
12:00—News
12:30—Ladies' Day
1:30—Cooks Corner
2:00—Film: "Dude Bandit"
3:15—News
3:30—Film.
4:30-Stu Wilson
KNBH (4)
12:45—News
1:00—Buy with Betty
1:30—Comedy Matinee
2:30-Chef Milani
3:00-Curious Camera
3:45—Shellah Graham
4:00—Kate Smith
KECA (7)—
12:30-Grace Lawson
1:45—Woman's Prog.
3:00-Cowboy Theater
4:15-F. Phillips

FREQUENCY MODULATION IN MEGACYCLES

MONDAY, FEBRUARY 19, 1951

Following Same as Daily Schedule

KNX—93.1 meg.—3:00-9:00
KECA—95.5 meg.
KFAC—104.3 meg.—24 hrs.
KHJ—101.1 meg.—2:30 9 p. m.
KFI—105.9 meg.—Music. 2:55-9:05
KUSC—91.5 meg.
5:00—Comments
5:15—Jr. Playhouse
6:00—Theater
7:00—Concert
8:00—Night Extra
8:30 Evenings on Roof
KMGM - 98.7 meg.—4:00-9:30 - Music
KKLA- 97.1 meg.—
5:00—In the Groove
5:30—Sports
7:00—Serenade
8:00—Concert
KFMV—94.7 meg.—
5:00—News, Joe Thompson
6:00—News
6:30—Music
7:00—Frank Edwards
7:30—Career Girl
8:00—Marquis Childs
8:15—Jazz
9:00-10:15—Music
KNOB—103.1 megs.—
5:30—Music
5:45-Bing Sings
6:00—Dinner Music
7:00—Stars on Parade
7:30—Curtain Calls
8:00—You Pick Music
8:55—Sports

TOMORROW (Tuesday) FEBRUARY 20

KUSC—91.5 meg.—
1:00—Music
3.00—Work Shop
4:00—Symphony
KNOB—103.1 meg.—FM in AM
4:00—Platter Party
KLON—88.1 meg.—(Voice of L. B. Public Schools)
8:50—Lindbergh Jr. High
9:05—Songs, Grade 3
9:20—Book Adventure
9:55—Lindbergh Jr. High
10:50—Lindbergh Jr. High
11:05—Hughes Jr. Hi.
11:40—Calif. Grade 5
12:00—Lindbergh Jr. High
12:39—Lindbergh Jr. High
1:35—Jefferson Jr. High
1:50—Lindbergh Jr. High
2:15—Bag o' Tales
2:30—Lindbergh Jr. High

KLON 88.1 | KUSC 91.5 | KNX-FM 93.1 | KFMV 94.7 | KECA-FM 95.5 | KRKD-FM 96.3 | KKLA 97.1 | KMGM 98.7 | KHJ-FM 101.1 | KNOB 103.1 | KFAC-FM 104.3 | KFI-FM 105.9

FM 88 90 92 94 96 98 100 102 104 106 108 AM

TUESDAY, FEBRUARY 20

DAWN TO 7 A. M.
KFOX—Texas Tiny (6:30)
KLAC Haynes
KFI—News, Farm Music, Pat Bishop (6:00)
KMPC Music, Farm.
KHJ—Rise & Shine
KECA Religious, News
KFWB—Bill Leyden
KNX—Ralph Story
KFAC—Concert
KGER—Stars Sing.
KVOE Mex Hour

7 A. M.
KLAC—Haynes
KFI-KFOX—News
KECA—Hollywood
KMPC—Farm Adv.
KHJ. KVOE—News
KNX—Art Godfrey
KFWB—Music
KFAC Coffee Conc't
KGER-Rev. Spencer

7:15 A. M.
KFOX—Mission
KFI—Fleetwd. Lwtn.
KMPC—News
KHJ-KVOE—Brkfst.
KGER- Aubrey Lee

7:30 A. M.
KFI—Platter Party
KFOX-Religious
KMPC—R. Mulholland
KECA—Bob Garred
KNX—Frank Goss

7:45 A. M.
KFI—Sam Hayes
KGER—W. B. Record
KECA—Z. Manners
KHJ—News
KNX—Harry Babbitt
KVOE—Reporter

8 A. M.
KLAC—News, stocks
KMPC—News
KFI—Coffee Time
KECA—Brkfst. Club
KHJ-KVOE—Cecil Brown
KFWB-News
KNX—Top of Morn.
KFAC—Religion
KGER—Mizpah
KFOX-Bible Society

8:15 A. M.
KFOX—Prison Missionary
KLAC—Haynes.
KMPC—Markets, Sports
KHJ-KNX—News
KFWB—Bill Leyden
KVOE—Stocks, Open House

8:30 A. M.
KLAC—News
KFI-Jack Berch
KMPC—R. Mulholland
KHJ-KVOE-Haven of Rest
KNX-Grand Slam
KGER—China's Voice
KFOX—Life Words

8:45 A. M.
KFI—Dave Garroway
KLAC—Racing News
KFAC—Unity
KNX-Rosemary
KFWB-News
KGER—Bible Treas.

9 A. M.
KLAC—News, Crosby
KFI—News.
KHJ—Kate Smith
KFWB-Music
KECA-J. Olsen
KNX—W. Warren
KFAC—Piano
KGER—Lutheran Hr.
KFOX—Pentecostal
KVOE-Club Variety

9:15 A. M.
KFOX-Home Missionary
KECA-March & Sweeney
KFI—Meyers to Market
KHJ—Garden Guide
KNX—Aunt Jenny

9:30 A. M.
KLAC-Top Tunes
KFI-Ladies Day
KECA-Quick as Flash
KHJ—Norma Young
KMPC—Chef Milani
KNX—Helen Trent
KFAC—Music
KFWB—Mrs. E. Roosevelt
KGER—God's ½ Hr.
KFOX—Full Gospel
KVOE—Variety

9:45 A. M.
KNX—My Gal Sunday

10 A. M.
KFI-Around Town
KLAC—Al Jarvis
KMPC—News, Melody
KNX—Big Sister
KHJ. KVOE—News.
KECA—V. Lindlahr
KFAC—Concert
KGER—News, Lee
KFOX—News. Rel.

10:15 A. M.
KECA—Records
KFWB—Music
KGER—T. Baird
KHJ. KVOE—Test
KNX—Ma Perkins

10:30 A. M.
KFI—Wendell Noble
KHJ-Russ Morgan
KHJ. KVOE—Tello Test
KMPC-Tune Test
KGER H Markham
KNX Dr Malone
KECA True Story
KFWB—News
KFOX—Music
KVOE Personalities
KFAC—Songs

10:45 A. M.
KHJ—C. Cavallaro
KFI—Life Beautiful
KGER-Rev. Kopp
KNX Guiding Light
KFOX Music
KFWB—Music

11 A. M.
KLAC—Al Jarvis
KFI—Double. Nothing
KMPC—News, L. A. Today
KHJ-KVOE—Ladies Fair.
KECA—B. Crocker
KFWB—Maurice Hart
KNX—Mrs. Burton
KFAC Guy Bates Post
KFOX-Rhythmic Age

11:15 A. M.
KECA—Easy Aces
KNX—Perry Mason
KGER-Mission

11:30 A. M.
KFI—Live Like Millionaire
KECA—J. B. Kennedy
KHJ KVOE Queen for a Day
KNX—Nora Drake
KFAC—Music Hall
KGER-Redemption Ranch
KFOX-News

11:45 A. M.
KMPC—Beaty Council
KNX—Brighter Day
KECA—Paul Harvey
KGER-Hour of Prayer

12 NOON
KFOX—Studio
KLAC—Al Jarvis
KFI—Farm Reporter
KMPC—Prayer, Music.
KHJ-KVOE-KECA—KNX-News
KFWB—Bill Anson
KFAC—Concert
KGER-Good News

12:15 P. M.
KFI—Road of Life
KFOX-KMPC—News
KHJ—Bell Ringer
KNX-Hill Top House
KGER World News
KECA-Records
KVOE—Farm Forum

12:30 P. M.
KFI Pepper Young
KMPC—Relig. Science
KECA—Modern Romance
KHJ—Nancy Dixon
KNX—Art Linkletter
KFWB—News
KGER—Serenade
KFOX—Studio
KVOE-U. N.

12:45 P. M.
KFI Happiness
KHJ—Cedric Foster
KECA-David Amity
KMPC—For Ranchers
KFAC—News
KVOE-Lanny Ross
KFOX—Latin Amer.

1 P. M.
KLAC—News, Sport 570 Club
KFI—Back Stage
KMPC—News, Bill Ewing
KHJ-KVOE-Jack Kirkwood
KECA—Ira Cook
KFWB Bill Anson
KNX—Jack Owens Show
KFAC—Festival
KFOX—Texas Tiny

1:15 P. M.
KGER—Army Voice
KFI—Stella Dallas
KFAC—L. A. Schools

1:30 P. M.
KFI—Lorenzo Jones
KFWB—News
KHJ-Double or Nothing
KNX—Protect. League
KGER-Adventure Research
KVOE—Red, White and Blue

1:45 P. M.
KFI—Widder Brown
KGER—News, Music
KGER—News, Rancho
KECA-Fran Scully
KVOE—Ranch
KFOX—Studio

2 P. M.
KLAC—News, Sports 570 Club
KFI—Girl Marries
KHJ—News
KFWB—Bill Anson
KFAC—Composers
KMPC—News, Johnny Grant
KECA Surprise
KNX-News, Paul Masterson
KVOE-1480 Club

2:15 P. M.
KHJ—Lunch with Lopez
KFI—Portia

2:30 P. M.
KHJ-Women Wonderful
KFI—Plain Bill
KNX-Mr. Information
KGER-Garden School
KECA-Benny Rubin

2:45 P. M.
KFI—Frnt Pg Farrell
KNX-Geo. Fisher

3 P. M.
KLAC—News, Sports 570 Club
KFI—Welcome Travelers
KMPC—News. Johnny Grant
KHJ-Club 930
KECA-Rudy Vallee
KNX—Art Godfrey
KFWB—Peter Potter
KFAC—Opera
KGER—News, Fiesta
KFOX-High Lights, Music
KVOE—1480 Club

3:15 P. M.
KFOX—Mat Melodies

3:30 P. M.
KFI—Aunt Mary
KFWB-KLAC—News

3:45 P. M.
KFI—Love and Learn
KFWB—Peter Potter
KHJ-Lynn & Hollywd.
KFAC—News
KFOX—Pension

4 P. M.
KLAC—News, Sports Stars
KMPC—News, Johnny Grant
KHJ-Fulton Lewis
KFI—Woman's Secret
KECA—Ted Malone
KNX—Curt Massey
KFAC—Masterpieces
KGER—Ranch, News
KFOX-News
KVOE—Music

4:15 P. M.
KMPC—Tales
KECA—Talk Back
KFI—Dr. Paul
KHJ-KVOE—Frank Hemingway
KNX—Strike It Rich
KFOX—Freddie Martin

4:30 P. M.
KFI—B. Wheeler
KMPC—Ira Cook
KHJ—Behind Story
KECA-Happy Theater
KFWB-Platter Pals
KVOE—Music
KFOX-West. Music

4:45 P. M.
KLAC—Racing
KECA—Headlines
KFOX—Frank Simon Sings.
KNX—Harry Babbitt
KVOE-KHJ—Haves
KGER—Sport (4:55).

TOMORROW (Tuesday) FEBRUARY 20

5 P. M.
KLAC—News Sports L. A. Today
KFI—Feature Wire
KMPC-Help Wanted
KHJ-KVOE—Tark Trail
KECA—News
KFWB—Red Rowe
KNX-Ed R. Murrow
KFAC—Serenade
KFOX—Mission
KGER—Quartet

5:15 P. M.
KLAC Jamboree (5:20)
KFI—News
KECA-Elmer Davis
KMPC-Raymond Swing
KNX—Tom Harmon
KGER-Rancho 1390

5:30 P. M.
KFI—Voice of Firestone
KMPC-Stars of Song
KECA Lou Crosby
KHJ KVOE-C. Beatty
KGER-Gospel Friends
KNX—Chet Huntley
KFAC—Who's Bill
KFOX—News

5:45 P. M.
KLAC—Sam Balter
KMPC-Top Tunes
KNX—Frank Goss
KGER—Gospel Friends
KFOX-Fishcaster

6 P. M.
KLAC-News, Jarvis
KMPC-Calif News
KECA Hank Weaver
KNX—Radio Theatre.
KFI-Amer. Way
KHJ—G. Hunter
KFWB News
KFAC—Twilight Hr.
KGER—Soul Clinic
KFOX—News, Music
KVOE—F. Lewis

6:15 P. M.
KMPC—Bob Kelley
KECA Hannibal Cobb
KHJ KVOE—News
KFWB-Sports
KFOX Hawaiian mus

6:30 P. M.
KFI David Rose
KMPC-Santa Anita
KECA-Boston Blackie
KHJ-Answer Man
KFWB—Am. Dancer
KFAC—Hour of Mus
KGER—Bible
KFOX—Memory Rm.
KVOE-Sports

6:45 P. M.
KHJ-KVOE Hayes

7 P. M.
KLAC-News, Crosby & Co
KFI—NBC Symphony
KMPC Music Memories
KECA Lone Ranger
KHJ—War Front-Home Front
KNX—Friend Irma.
KGER—Family Bible
KFOX—Accordiana
KVOE Have You Read

7:30 P. M.
KLAC Music
KECA—Inner Sanctum.
KMPC—Top Ten.
KHJ-KVOE Cisco Kid
KFWB—Job Opportunities
KNX—Bob Hawk.
KGER-Rev Harlan

7:45 P. M.
KFOX—News
KFWB—Rosary Hr.

8 P. M.
KLAC News, Music
KFI One Man's Family
KMPC Southland Story
KHJ KVOE Let Geo Do It
KECA Go With Ralph Flanagan
KFWB Internal Revenue
KNX Lowell Thomas
KFAC Eve Concert
KFOX Concert
KGER Bible

8:15 P. M.
KMPC Harmonies
KFI—News
KFWB—Nat. Guard
KGER—Hebrew Christian
KNX Smith & Whiting
KFOX Averill Berman

8:30 P. M.
KFI—Railroad Hour
KMPC—Your City.
KECA—H. Taylor
KHJ—Under Arrest
KNX—Talent Scouts
KFWB-News
KGER—Floyd Johnson
KVOE—War Front

8:45 P. M.
KFOX—Sacramento News Letters
KMPC-Human Relations
KFWB—U. N.
KECA—World Flashes

9 P. M.
KLAC-News, Music
KFI—Telephone Hr.
KMPC-Hollywood Closeup
KECA—Richard Wallace Show.
KHJ-KVOE—News
KGER—Bible Study
KFWB—Music
KNX—Star Playhouse.
KFAC—Eve. Concert
KFOX—Stories

9:15 P. M.
KMPC-Curtain Call
KHJ-KVOE-F. Lewis
KFOX—Business Reporter

9:30 P. M.
KMPC-Dance Time
KFI—Boston Pop Orchestra
KECA—Piano Playhouse
KGER Brown Schis
KNX-Beulah
KHJ Crime Fighters
KFWB—News
KFOX-Music
KVOE—Frost Warn. Crime Fighters

9:45 P. M.
KFWB—In Hollywood
KNX—Club 15
KFOX—Music

10 P. M.
KLAC—Boxing
KFI—Reporter
KGER—When Day Is Done.
KECA—News
KHJ-Mystery
KFWB—G. Norman
KNX-10 o'Clock Wire
KFAC—Music
KFOX Music.
KVOE—Under Arrest

10:15 P. M.
KFI—Virgil Pinkley
KHJ-Frank Edwards
KECA—Dr. F. Bailes
KNX—Bob Elson

10:30 P. M.
KFI—Johnny Murray
KHJ—Lonesome Gal
KGER-Music
KECA-John B. Kennedy, 1 for book
KNX—Starlite Salute
KFOX-Music
KVOE-Frost Warn.—Bing Sings

10:45 P. M.
KFI—Sports
KGER—Music

11 P. M.
KGER—Spirituals
KLAC—Don Otis
KFI—News
KMPC-Leisure Time
KHJ-News
KECA-New Yorkers
KFWB—G. Norman
KNX—News
KFOX-Music
KVOE-I Love a Mystery

11:15 P. M.
KFI-Biltmore Orch.
KHJ-The Continental
KNX—Merry Go Round
KVOE Music

11:30 P. M.
KGER—Ranch house
KFI-For You
KHJ-Crowell's Nest
KECA Phil Report, Footlight Favorites
KFOX Memory Rm.

11:45 P. M.
KNX-You & World
KVOE-Frost Warn.

12 MIDNIGHT
KLAC Don Otis
KFI—Music Menu
KFWB Sam Mannis
KNX News, Bob Hopkins
KECA Herb Allen, News

DAWN TO 7 A. M. WEDNESDAY, FEBRUARY 21

5:30 A. M.
KFOX—Bible Society

8:15 A. M.
KFOX—Prison Missionary
KLAC—Haynes.
KMPC—Markets, Sports
KHJ-KNX—News
KFWB—Bill Leyden
KVOE—Stocks, Open House

8:30 A. M.
KLAC—News
KFI-Jack Berch
KMPC—R. Mulholland
KHJ-KVOE-Haven of Rest
KNX-Grand Slam
KGER—China's Voice
KFOX—Life Words

8:45 A. M.
KFI—Dave Garroway
KLAC—Racing News
KFAC—Unity
KNX-Rosemary
KFWB-News
KGER—Bible Treas.

9 A. M.
KLAC—News, Crosby
KFI—News.
KHJ—Kate Smith
KFWB-Music
KECA-J. Olsen
KNX—W. Warren
KFAC—Piano
KGER—Lutheran Hr.
KFOX—Pentecostal
KVOE-Club Variety

9:15 A. M.
KFOX-Home Missionary
KECA-March & Sweeney
KFI—Meyers to Market
KHJ—Garden Guide
KNX—Aunt Jenny

9:30 A. M.
KLAC-Top Tunes
KFI-Ladies Day
KECA-Quick as Flash
KHJ—Norma Young
KMPC—Chef Milani
KNX—Helen Trent
KFAC—Music
KFWB—Mrs. E. Roosevelt
KGER—God's ½ Hr.
KFOX—Full Gospel
KVOE—Variety

9:45 A. M.
KNX—My Gal Sunday

10 A. M.
KFI-Around Town
KLAC—Al Jarvis
KMPC—News, Melody
KNX—Big Sister
KHJ. KVOE—News.
KECA—V. Lindlahr
KFAC—Concert
KGER—News, Lee
KFOX—News. Rel.

10:15 A. M.
KECA—Records
KFWB—Music
KGER—T. Baird
KHJ. KVOE—Test
KNX—Ma Perkins

10:30 A. M.
KFI—Wendell Noble
KHJ-Russ Morgan
KHJ. KVOE—Tello Test
KMPC-Tune Test
KGER H Markham
KNX Dr Malone
KECA True Story
KFWB—News
KFOX—Music
KVOE Personalities
KFAC—Songs

10:45 A. M.
KHJ—C. Cavallaro
KFI—Life Beautiful
KGER-Rev. Kopp
KNX Guiding Light
KFOX Music
KFWB—Music

11 A. M.
KLAC—Al Jarvis
KFI—Double. Nothing
KMPC—News, L. A. Today
KHJ-KVOE—Ladies Fair.
KECA—B. Crocker
KFWB—Maurice Hart
KNX—Mrs. Burton
KFAC Guy Bates Post
KFOX-Rhythmic Age

11:15 A. M.
KECA—Easy Aces
KNX—Perry Mason
KGER-Mission

11:30 A. M.
KFI—Live Like Millionaire
KECA—J. B. Kennedy
KHJ KVOE Queen for a Day
KNX—Nora Drake
KFAC—Music Hall
KGER-Redemption Ranch
KFOX-News

11:45 A. M.
KMPC—Beaty Council
KNX—Brighter Day
KECA—Paul Harvey
KGER-Hour of Prayer

12 NOON
KFOX—Studio
KLAC—Al Jarvis
KFI—Farm Reporter
KMPC—Prayer, Music.
KHJ-KVOE-KECA—KNX-News
KFWB—Bill Anson
KFAC—Concert
KGER-Good News

12:15 P. M.
KFI—Road of Life
KFOX-KMPC—News
KHJ—Bell Ringer
KNX-Hill Top House
KGER World News
KECA-Records
KVOE—Farm Forum

12:30 P. M.
KFI Pepper Young
KMPC—Relig. Science
KECA—Modern Romance
KHJ—Nancy Dixon
KNX—Art Linkletter
KFWB—News
KGER—Serenade
KFOX—Studio
KVOE-U. N.

12:45 P. M.
KFI Happiness
KHJ—Cedric Foster
KECA-David Amity
KMPC—For Ranchers
KFAC—News
KVOE-Lanny Ross
KFOX—Latin Amer.

1 P. M.
KLAC—News, Sport 570 Club
KFI—Back Stage
KMPC—News, Bill Ewing
KHJ-KVOE-Jack Kirkwood
KECA—Ira Cook
KFWB Bill Anson
KNX—Jack Owens Show
KFAC—Festival
KFOX—Texas Tiny

1:15 P. M.
KGER—Army Voice
KFI—Stella Dallas
KFAC—L. A. Schools

1:30 P. M.
KFI—Lorenzo Jones
KFWB—News
KHJ-Double or Nothing
KNX—Protect. League
KGER-Adventure Research
KVOE—Red, White and Blue

1:45 P. M.
KFI—Widder Brown
KGER—News, Music
KGER—News, Rancho
KECA-Fran Scully
KVOE—Ranch
KFOX—Studio

2 P. M.
KLAC—News, Sports 570 Club
KFI—Girl Marries
KHJ—News
KFWB—Bill Anson
KFAC—Composers
KMPC—News, Johnny Grant
KECA Surprise
KNX-News, Paul Masterson
KVOE-1480 Club

2:15 P. M.
KHJ—Lunch with Lopez
KFI—Portia

2:30 P. M.
KHJ-Women Wonderful
KFI—Plain Bill
KNX-Mr. Information
KGER-Garden School
KECA-Benny Rubin

2:45 P. M.
KFI—Frnt Pg Farrell
KNX-Geo. Fisher

3 P. M.
KLAC—News, Sports 570 Club
KFI—Welcome Travelers
KMPC—News. Johnny Grant
KHJ-Club 930
KECA-Rudy Vallee
KNX—Art Godfrey
KFWB—Peter Potter
KFAC—Opera
KGER—News, Fiesta
KFOX-High Lights, Music
KVOE—1480 Club

3:15 P. M.
KFOX—Mat Melodies

3:30 P. M.
KFI—Aunt Mary
KFWB-KLAC—News

3:45 P. M.
KFI—Love and Learn
KFWB—Peter Potter
KHJ-Lynn & Hollywd.
KFAC—News
KFOX—Pension

4 P. M.
KLAC—News, Sports Stars
KMPC—News, Johnny Grant
KHJ-Fulton Lewis
KFI—Woman's Secret
KECA—Ted Malone
KNX—Curt Massey
KFAC—Masterpieces
KGER—Ranch, News
KFOX-News
KVOE—Music

4:15 P. M.
KMPC—Tales
KECA—Talk Back
KFI—Dr. Paul
KHJ-KVOE—Frank Hemingway
KNX—Strike It Rich
KFOX—Freddie Martin

4:30 P. M.
KFI—B. Wheeler
KMPC—Ira Cook
KHJ—Behind Story
KECA-Happy Theater
KFWB-Platter Pals
KVOE—Music
KFOX-West. Music

4:45 P. M.
KLAC—Racing
KECA—Headlines
KFOX—Frank Simon Sings.
KNX—Harry Babbitt
KVOE-KHJ—Haves
KGER—Sport (4:55).

Malayan Town to Be Destroyed

SINGAPORE, Feb. 19. (AP) British authorities have marked the Malayan village of Jenderam for destruction, condemning it as a nest of Communist terrorists and funnel point for Red supplies and propaganda.

The move is part of Britain's effort to wipe out breeding spots for the Red guerrilla warfare that has plagued the Malayan federation since it came into being with its own constitution on Feb. 1, 1948. Officials said Jenderam would be burned to the ground.

137 New Casualties

WASHINGTON, Feb. 19. (AP) The Defense Department today identified 137 additional casualties of the war in Korea. The new list (No. 230) reported 29 killed or dead of wounds, 95 wounded, six missing in action and seven injured in accidents.

Ohio's Last GAR Veteran Dies at 104

WAUSEON, Ohio, Feb.19. (AP) Daniel Clingaman, 104, Ohio's last surviving veteran of the Grand Army of the Republic, died here yesterday. He had suffered a cerebral hemorrhage three weeks ago.

Clingaman and a brother served as buck privates in Company D, 105th Volunteer Infantry. He marched with Gen. Philip Sheridan's army through the Shenandoah Valley to Richmond, Va., when the Civil War ended.

Surviving besides a daughter are seven grandchildren and 10 great-grandchildren. His wife, Louise, died in 1923.

Aussie Woman, Two Murder Aids Hanged

MELBOURNE, Australia, Feb. 19. (AP) A young divorcee, doped with sedatives, was carried to the gallows today for the torture murder of an aged bookmaker. She was the first woman to be hanged in Victoria state in more than half a century.

Executed with 32-year-old Jean Lee were two male accomplices—her lover, Robert David Clayton, 31, a clerk, and Norman Andrews, 38, a bookmaker.

The trio, all from Sydney, were convicted of murdering 73-year-old William Kent in his boarding house room Nov. 7, 1949. Trial testimony showed they tortured him to learn where his money was hidden, then beat and strangled him.

TV REPAIRING
FOR FINEST TV SERVICE
We repair all makes.
Factory-trained technicians.
HOWARD'S
PHONE 70-5438 356 AMERICAN AVE.

If you want the best
TELEVISION
SERVICE
GEM
4228 ATLANTIC
PHONE 4-9860 40-3405

WHEN YOU BUY TELEVISION—
BUY Hoffman TELEVISION
easy-vision
BACKED BY FAMED
AUTHORIZED Hoffman TELEVISION SERVICE
TWO SERVICES AVAILABLE FOR YOUR HOFFMAN:
1. HOFFMAN AUTHORIZED DEALER SERVICE: Dealer technicians, factory-trained. Hoffman-approved dealer service departments display the "Authorized Service" emblem shown above. LOOK FOR IT!
2. HOFFMAN FACTORY OPERATED SERVICE: Installations and TV Repairs by Hoffman factory technicians. ASK YOUR DEALER!

Portland
Only 5½ hours by deluxe Convair!
Call 4-8571, or see your authorized travel agent.
WESTERN AIR LINES

SERVICE WHILE YOU WAIT
2537 AMERICAN AVENUE
PHONE 4-4584
FOR THE FINEST RADIO AND TELEVISION SERVICE
At the Shop or In Your Home
Hours 10 to 10 Daily—1 to 7 Sundays
DRIVE-IN TV SERVICE
2537 AMERICAN AVE.

delicious
DE LUXE BANQUETS
IN OUR NEW SOUTH AMERICAN ROOM
★
HOWARD MILLETT Manager
HALL RENTALS
Reasonable Rates
Town Hall
(Formerly Masonic Temple)
835 Locust Ave. Phone 70-2985

TV OWNERS
Convert Your 10-Inch Set to the New 14" Black Rectangular Tube
Installed Complete With 6-Month Guarantee $109.50
AUTO RADIOS for Every Make of Car 44.95 up
Pacific Ave. Radio & TV
2033 Pacific Ave. Phone 6-6543
"ESTABLISHED 1927"

be merry, be cheery, be happy, be gay
Don McNeill's
Breakfast Club
Monday through Friday 8:00-9:00 a. m.
presented by Swift, General Mills and Philco
KECA DIAL 790
OF COURSE, IT'S ON ABC

America's Low Cost Television Triumph!
$229.95
Plus Fed. Excise Tax
Cash or Terms
4 Sets Available in Mahogany, Walnut Blond
With or Without Warranty
for a FREE demonstration
visit the
MUNTZ SHOWROOM
219 E. 4th St.
LONG BEACH
Open Until 10 P. M.

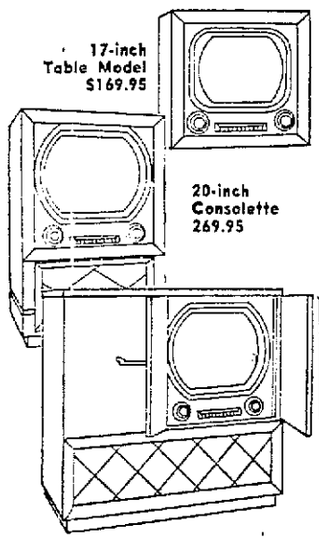

Muntz TV
PHONE 7-2221